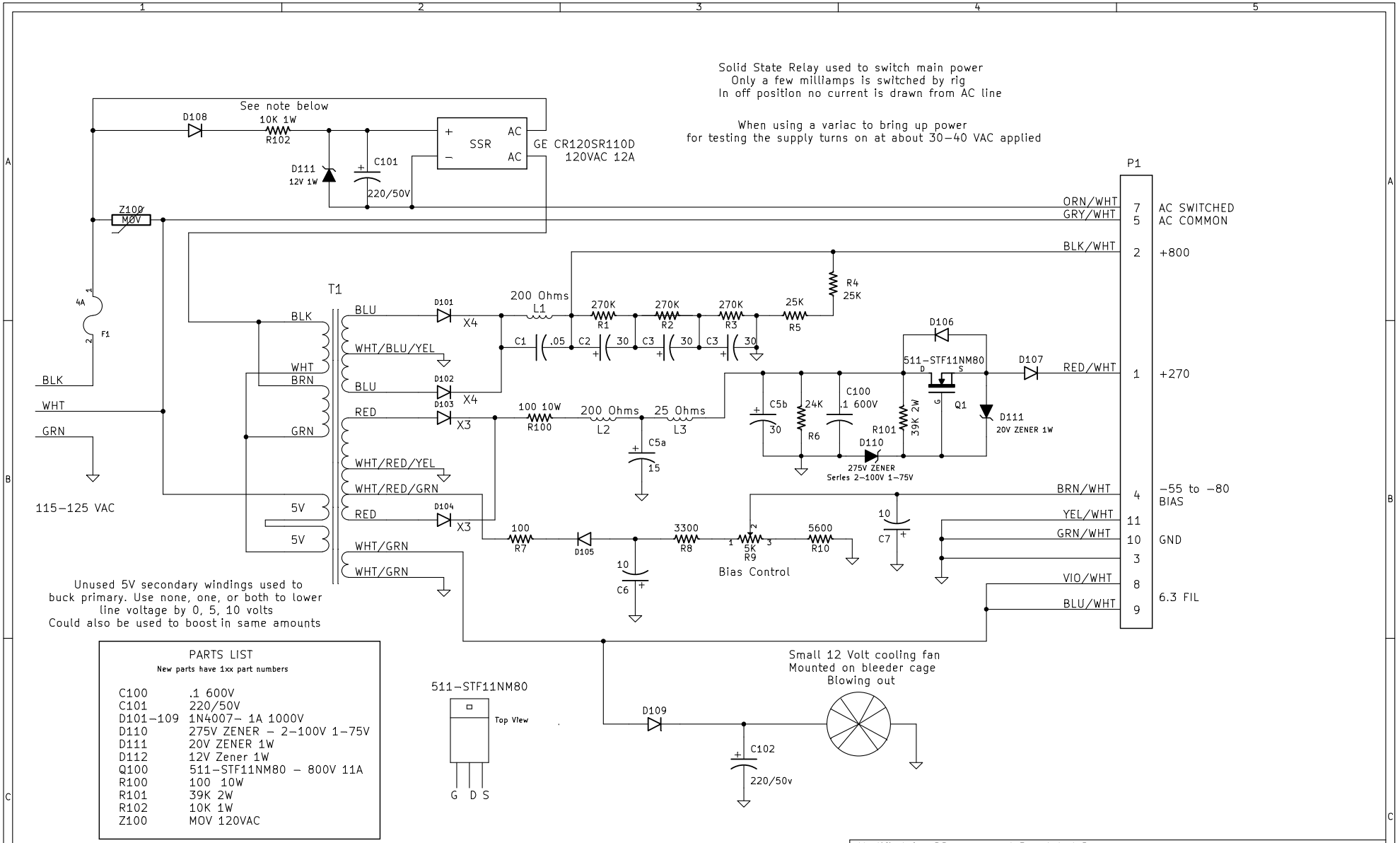
Solid State Relay used to switch main power
Only a few milliamps is switched by rig
In off position no current is drawn from AC line
When using a variac to bring up power
for testing the supply turns on at about 30-40 VAC applied
See note below
D108
10K 1W
R102
D111
12V 1W
C101
220/50V
SSR
AC
AC
GE CR120SR110D
120VAC 12A
Z100
MOV
4A
F1
BLK
WHT
GRN
115-125 VAC
T1
BLU
WHT/BLU/YEL
WHT
BRN
BLU
RED
GRN
WHT/RED/YEL
WHT/RED/GRN
RED
5V
5V
WHT/GRN
WHT/GRN
D101
D102
D103
D104
X4
X4
X3
X3
200 Ohms
L1
C1
.05
C2
30
C3
30
C3
30
270K
R1
270K
R2
270K
R3
25K
R5
R4
25K
D106
511-STF11NM80
D
S
G
Q1
D107
RED/WHT
D111
20V ZENER 1W
C5b
30
24K
R6
C100
.1 600V
R101
39K 2W
D110
275V ZENER
Series 2-100V 1-75V
100 10W
R100
200 Ohms
L2
25 Ohms
L3
C5a
15
100
R7
D105
10
C6
3300
R8
5K
R9
Bias Control
5600
R10
10
C7
P1
ORN/WHT
GRY/WHT
BLK/WHT
BRN/WHT
YEL/WHT
GRN/WHT
VIO/WHT
BLU/WHT
7
5
2
1
4
11
10
3
8
9
AC SWITCHED
AC COMMON
+800
+270
-55 to -80
BIAS
GND
6.3 FIL
Unused 5V secondary windings used to
buck primary. Use none, one, or both to lower
line voltage by 0, 5, 10 volts
Could also be used to boost in same amounts
PARTS LIST
New parts have 1xx part numbers
C100 .1 600V
C101 220/50V
D101-109 1N4007- 1A 1000V
D110 275V ZENER - 2-100V 1-75V
D111 20V ZENER 1W
D112 12V Zener 1W
Q100 511-STF11NM80 - 800V 11A
R100 100 10W
R101 39K 2W
R102 10K 1W
Z100 MOV 120VAC
511-STF11NM80
Top View
G D S
Small 12 Volt cooling fan
Mounted on bleeder cage
Blowing out
D109
C102
220/50v
- R102 in the turn-on circuit drops the voltage for the SSR
select the value and wattage based on the current draw of the selected SSR
Typically 10ma or so is required for turn on.
-Rectifier diodes - 3 per leg in low B+ and 4 per leg in HV.
Regulator design originally by W6BN (W7ASB)
Modified for SS power and Regulated B+
Doug Crompton - WA3DSP
File: Collins.sch
Sheet: /
Title: Collins 516-F2 Power Supply Modified
Size: A4
Date: 9 oct 2013
Rev:
KiCad E.D.A. eeschema (2012-01-19 BZR 3256)-stable
Id: 1/1